24" Pocket Handle Dishwasher

800 Series – Stainless Steel SHP78CM5N



SHP78CM5N
Stainless Steel

Also available in:

White	SHP78CM2N
Black	SHP78CM6N
Black Stainless	SHP78CM4N

PowerControl™ spray arm targets your dirtiest dishes with a deeper clean, no matter where you load them on the bottom rack.

Features & Benefits

So quiet at 42 dBA, the InfoLight® bar shines below the handle so you know the dishwasher is running.

Patented CrystalDry™ technology transforms moisture into heat to get dishes, including plastics, 60% drier.†

The Flexible 3rd Rack with fold down sides adds 30% more* loading area, perfect for utensils and ramekins.

Enhance your cleaning experience with Wi-Fi enabled Home Connect®. Access additional wash cycles and options or choose the right one for your needs using Smart Cycle.

General Properties	
Wash cycles (control panel)	5 (Heavy, Auto, Normal, Speed60® (1 hr Wash), Favorite)
Additional wash cycles (in Home Connect®)	3 (Delicate, Rinse, MachineCare)
Options (control panel)	4 (Sanitize, Remote Start, CrystalDry™, PowerControl Options)
Additional options (in Home Connect®)	2 (Half Load, Eco)
dBA	42
Wash system	PrecisionWash® with PowerControl™
Drying system	CrystalDry™
Third rack	Flexible 3rd Rack
Rack adjustability	Rackmatic®
Tub material	Stainless Steel
Concealed water heating element	Yes
Leak protection system	24/7 AquaStop®
Home Connect® (WiFi enabled)	Yes
NSF®-certified** sanitize option	Yes
Water softener	No
Five-level wash	Yes
Child Lock button suspension	No
Anti-Fingerprint Finish	Yes
Special features	CrystalDry™ Option, InfoLight®

Efficiency	
Water usage per cycle	3.2 gal
ENERGY STAR® Certified	Yes
Total annual energy consumption	240 kWh

Capacity	
Number of place settings	16

Technical Details	
Watts	1440 W
Current	12 Amps
Volts	120 V
Frequency	60 Hz
Power cord full length	67"
Power cord install length from edge of unit when facing the door	Left – 45" Right – 56"
Minimum water pressure	14 lb/sin
Length outlet hose	78 3/4"

Dimensions & Weight	
Overall appliance dimensions (HxWxD)	33 7/8" x 23 9/16" x 23 3/4"
Required cutout size (HxWxD)	33 7/8" x 24" x 24"
Adjustable feet	Yes
Net weight	96 lbs

Accessories–Optional	
Junction Box	SMZPCJB1UC
Junction Box + Supply Hose Kit	SMZ3IN1UC
Supply Hose Kit with Elbow	SMZSH1ABUC
Drain Hose Extension Kit	SGZ1010UC
Edge Protector + Power Cord Clip Install Kit	SMZEPCC1UC
Flexible 3rd Rack	SMZCD200UC

† Based on aggregate average drying performance of Bosch Dishwashers with CrystalDry™ on combined household load including plastics, glass, steel, and porcelain as compared to Bosch Dishwashers with PureDry®. Drying performance may vary by dish type.
*Compared to a Bosch dishwasher with 2 racks.
**Certification to NSF/ANSI Standard 184 for residential dishwashers.

Accessories: To purchase Bosch accessories, cleaners & parts please visit www.bosch-home.com/us/store or call 1-800-944-2904 (Mon to Fri 5 am to 6 pm PST, Sat 6 am to 3 pm PST).

Notes: All height, width and depth dimensions are shown in inches. BSH reserves the absolute and unrestricted right to change product materials and specifications, at any time, without notice. Consult the product's installation instructions for final dimensional data and other details prior to making cutout.

Warranties: Please see Use & Care manual or Bosch website for statement of limited warranty.

For more information on our entire line of products, go to www.bosch-home.com/us or call 1-800-944-2904

© BSH Home Appliances Corporation. All rights reserved. Bosch is a registered trademark of Robert Bosch GmbH.

24" Pocket Handle Dishwasher

800 Series – Stainless Steel SHP78CM5N

Installation Details

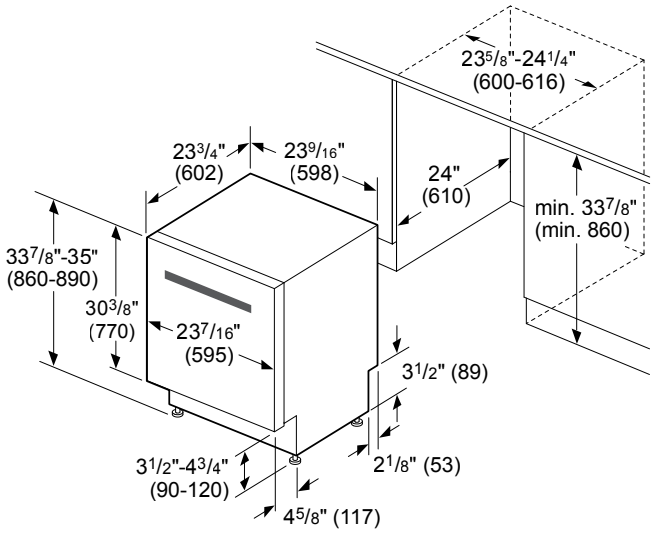

measurements in inches (mm)

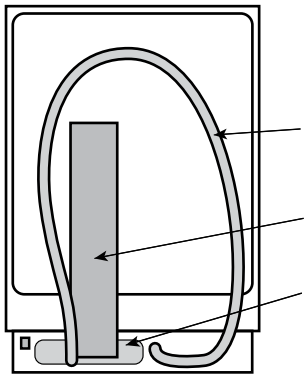

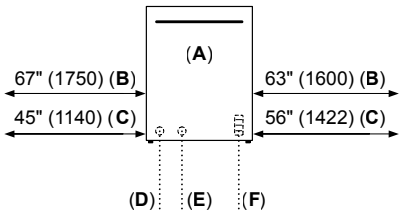

A: Front view
B: Drain hose
C: Electrical Power Cord: length shown according to Installation Instructions
D: Inlet
E: Drain
F: Electrical

All connections are at the rear of the appliance. Extension for drain hose available as accessory. Junction Box for hard wired connection available as an accessory.

Measurements in inches (mm)

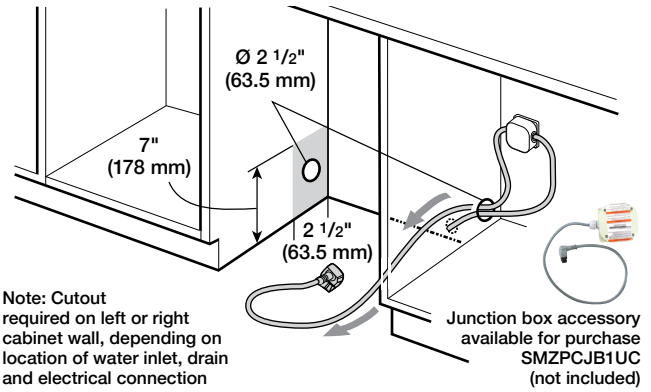

Example of Hardwire Installation

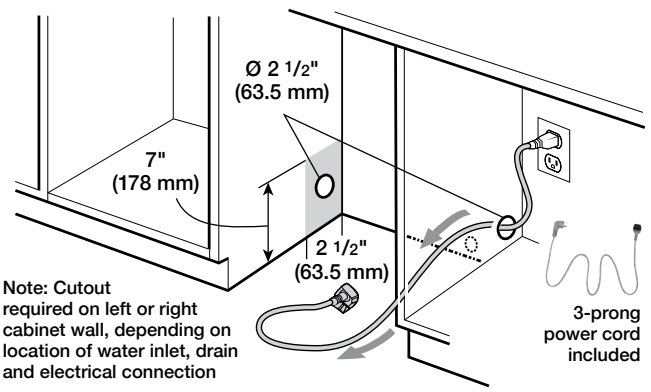

Example of an Electrical Receptacle Installation

PFAS

Accessories: To purchase Bosch accessories, cleaners & parts please visit www.bosch-home.com/us/store or call 1-800-944-2904 (Mon to Fri 5 am to 6 pm PST, Sat 6 am to 3 pm PST).

Notes: All height, width and depth dimensions are shown in inches. BSH reserves the absolute and unrestricted right to change product materials and specifications, at any time, without notice. Consult the product's installation instructions for final dimensional data and other details prior to making cutout.

Warranties: Please see Use & Care manual or Bosch website for statement of limited warranty.

For more information on our entire line of products, go to www.bosch-home.com/us or call 1-800-944-2904

© BSH Home Appliances Corporation. All rights reserved. Bosch is a registered trademark of Robert Bosch GmbH.

24" Pocket Handle Dishwasher

800 Series – Stainless Steel SHP78CM5N

Installation Details

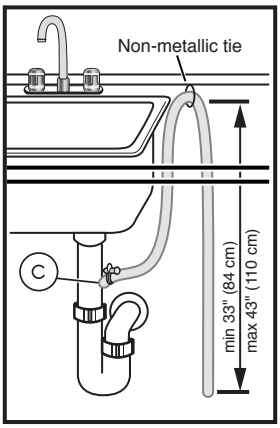

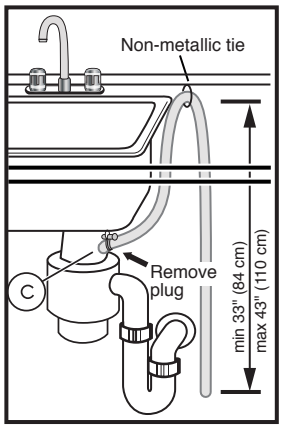

Note: Plumbing installations will vary - refer to local codes. Drain hose included is 79" (201 cm) and can be extended to a maximum of 155 3/4" (396 cm).

Always use the approved drain hose extension kit (SGZ1010UC).

Ensure a portion of the drain hose is raised between min. 33" (84 cm) and max. 43" (110 cm) above the cabinet floor.

Accessories: To purchase Bosch accessories, cleaners & parts please visit www.bosch-home.com/us/store or call 1-800-944-2904 (Mon to Fri 5 am to 6 pm PST, Sat 6 am to 3 pm PST).

Notes: All height, width and depth dimensions are shown in inches. BSH reserves the absolute and unrestricted right to change product materials and specifications, at any time, without notice. Consult the product's installation instructions for final dimensional data and other details prior to making cutout.

Warranties: Please see Use & Care manual or Bosch website for statement of limited warranty.

For more information on our entire line of products, go to www.bosch-home.com/us or call 1-800-944-2904

© BSH Home Appliances Corporation. All rights reserved. Bosch is a registered trademark of Robert Bosch GmbH.