FISHER & PAYKEL

GAS COOKTOPS

PROFESSIONAL

CDV3-365H, CDV3-365 CDV3-304H, CDV3-304

INSTALLATION GUIDE

⚠ WARNING!

If the information in this manual is not followed exactly, a fire or explosion may result causing property damage, personal injury or death.

Do not store or use gasoline or other flammable vapors and liquids in the vicinity of this or any other appliance.

NEVER use this appliance as a space heater to heat or warm the room. Doing so may result in carbon monoxide poisoning and overheating of the appliance.

What to Do if you Smell Gas

- Do not try to light any appliance.
- Do not touch any electrical switch.
- Do not use any phone in your building.
- Immediately call your gas supplier from a neighbor's phone. Follow the gas supplier's instructions.
- If you cannot reach your gas supplier, call the fire department.

Installation and service must be performed by a qualified installer, service agency or the gas supplier.

⚠ WARNING!

Never operate the top surface cooking section of this appliance unattended.

- Failure to follow this warning statement could result in fire, explosion or burn hazard that could cause property damage, personal injury or death.
- If a fire should occur, keep away from the appliance and immediately call your fire department. Do not attempt to extinguish an oil/grease fire with water

⚠ WARNING!



Electric Shock Hazard

Failure to follow this advice may result in electrical shock or death.

- Before carrying out any work on the electrical section of the appliance, it must be disconnected from the mains electricity supply.
- Connection to a good ground wiring system is absolutely essential and mandatory.
- Alterations to the domestic wiring system must only be made by a qualified electrician.

⚠ WARNING!



Cut Hazard

Failure to use caution could result in injury.

- Take care: some edges are sharp.

READ AND SAVE THIS GUIDE

WARNING!

To reduce the risk of fire, injury to persons or damage when using the appliance, follow the important safety instructions listed below. Read all the guidance before using the appliance.

Servicing

- Do not repair or replace any part of the appliance unless specifically recommended in the user guide. All other servicing should be undertaken be a Fisher & Paykel trained and supported service technician or qualified person.
- Technicians must disconnect the power supply before servicing this appliance.
- Please make this information available to the person installing the appliance
- This appliance must be installed and connected to the mains power supply only by a suitably qualified person according to these installation instructions and in compliance with any applicable local building and electricity regulations. Failure to install the appliance correctly could invalidate any warranty or liability claims.

Gas Requirements

- Be sure that the unit being installed is set up for the kind of gas being used. The gas rangetop is shipped from the factory set and adjusted for Natural Gas or LP (propane), depending on the specific model ordered. Verify that the rangetop is compatible with the gas at the installation site before proceeding further.
- Return cooktop to dealer if the unit is not set for site gas supply.

General

- The appliance must not be installed behind a decorative door in order to avoid overheating.
- The cooktop must be grounded.
- Installation must comply with your local building and electricity regulations.
- Ensure the installer shows the customer where the gas supply shut-off valve is located.
- A circuit breaker is recommended.
- If the power supply cable is damaged, it must be replaced by the manufacturer, its service agent or similarly qualified person in order to avoid a hazard.
- Do not use adaptors, reducers or branching devices to connect the cooktop to the mains electricity supply, as they can cause overheating and burning.
- Improper installation, adjustment alteration, service or maintenance can cause property damage, injury or death. Read the installation, operating and maintenance instructions thoroughly before using, installing or servicing this appliance.
- DO NOT obstruct the flow of combustion or ventilation air to the appliance. Be sure a fresh air supply is available.
- Check local building codes for the proper method of cooktop installation. Local codes vary. Installation, electrical connections, and grounding must comply with all applicable codes. In the absence of local codes, the cooktop should be installed in accordance with the latest edition of National Fuel Gas Code ANSI Z223.1 and National Electrical Code ANSI / NFPA 70.
- The cooktops are tested in accordance with ANSI Z21.1 Standard for Household Cooking Gas Appliances. These cooktops must be installed in conjunction with a suitable overhead vent hood. (See ventilation requirements). Due to the high heat capacity of this unit, particular attention should be paid to the hood and duct work installation to ensure it meets local building codes. To eliminate risk of burns or fire by reaching over heated surface units, cabinet storage located above the surface units should be avoided.
- In Canada: Installation must be in accordance with the current CSA C22.1 Canadian Electrical Codes Part 1 and/or local codes. Installation must be in accordance with the current CAN/CGA B149.1 & 2 Gas Installation codes and/or local codes. Electrical installation must be in accordance with the current CSA C22.1 Canadian Electrical Codes Part 1 and/or local codes.

COMPONENTS REQUIRED

PARTS

- Keep all packing materials until the unit has been inspected.
- Inspect the product to ensure there is no shipping damage. If any damage is detected contact the dealer or retailer you bought the product from to report the damage.
- Fisher & Paykel is not responsible for shipping damage.

Supplied

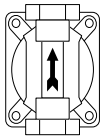

Regulator (1)

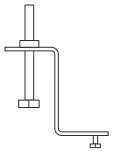

Brackets (4)

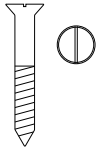

Screws (4)

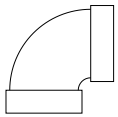

Gas elbow (1)

TOOLS

Not supplied

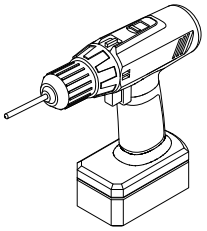

Powered driver

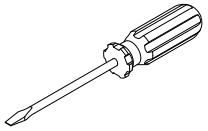

Flat-head screw driver

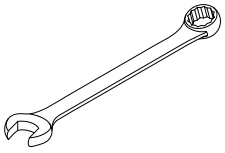

15/16" spanner (2)

PRODUCT DIMENSIONS 30" MODELS

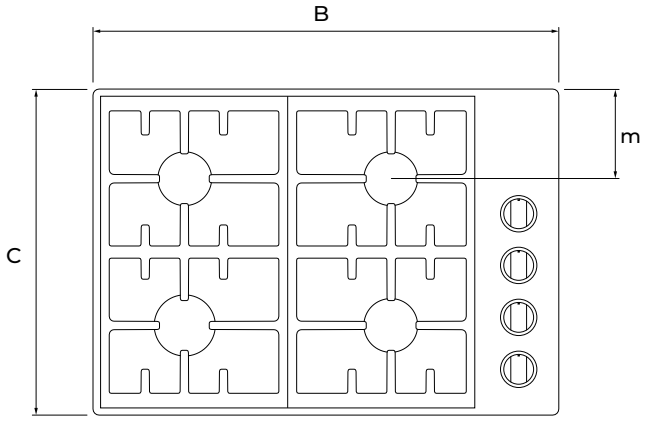

PLAN

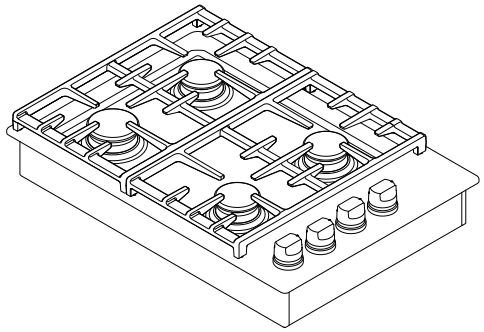

ISOMETRIC

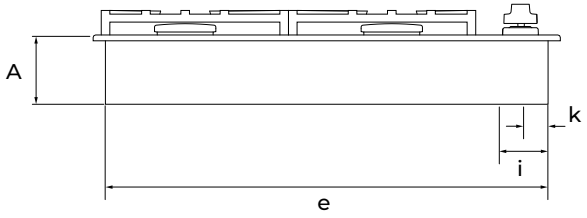

FRONT

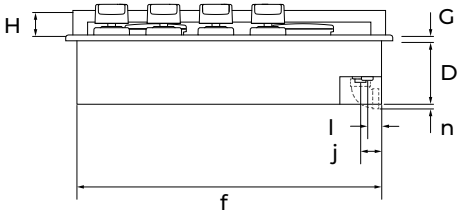

PROFILE

PRODUCT DIMENSIONS		30" MODELS	
		IN	MM
A	Overall height*	4 5/16	110
B	Overall width	30	762
C	Overall depth	21	533
D	Height of chassis	4	102
E	Width of chassis	28 7/16	723
F	Depth of chassis	19 3/8	492
G	Height above countertop	3/8	10
H	Height above countertop to top of grates	1 9/16	40
I	Distance from right edge of chassis to centre of gas inlet	2 3/4	70
J	Distance from rear edge of chassis to centre of gas inlet	1 5/16	33
K	Distance from right edge of chassis to centre of power cord	7/8	22
L	Distance from rear edge of chassis to centre of power cord	13/16	21
M	Distance from centre of rear burner to rear of cooktop	5 3/4	146
N	Distance from base of chassis to base of elbow**	3/8	10

*Excluding grates

**When fitted.

PRODUCT WEIGHT	30" MODELS	
	LB	KG
Weight of product (excluding packaging)	64	29

CDV3 304 model illustrated

Dimensions may vary by ± 2 mm

PRODUCT DIMENSIONS 36" MODELS

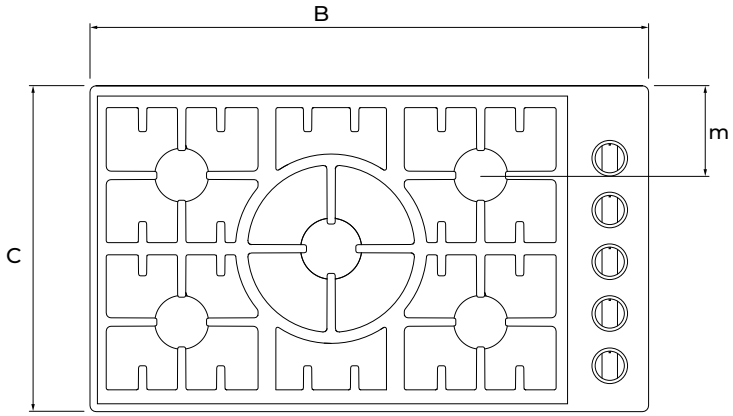

PLAN

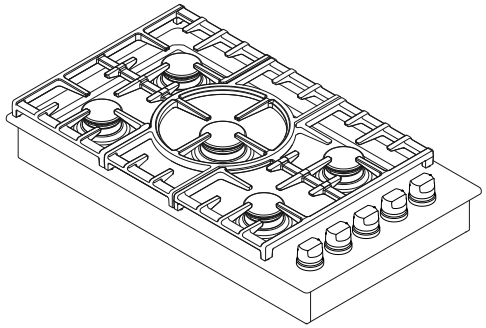

ISOMETRIC

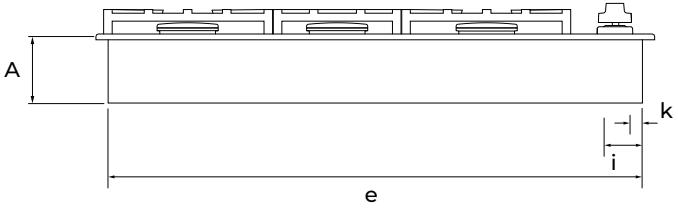

FRONT

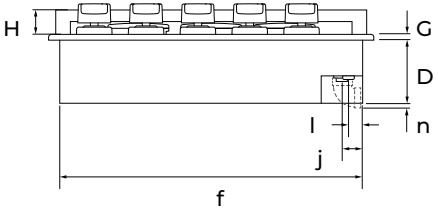

PROFILE

PRODUCT DIMENSIONS		36" MODELS	
		IN	MM
A	Overall height*	4 5/16	110
B	Overall width	36	915
C	Overall depth	21	533
D	Height of chassis	4	102
E	Width of chassis	34 7/16	874
F	Depth of chassis	19 3/8	492
G	Height above countertop	3/8	10
H	Height above countertop to top of grates	1 9/16	40
I	Distance from right edge of chassis to centre of gas inlet	2 3/4	70
J	Distance from rear edge of chassis to centre of gas inlet	1 5/16	33
K	Distance from right edge of chassis to centre of power cord	7/8	23
L	Distance from rear edge of chassis to centre of power cord	13/16	22
M	Distance from centre of rear burner to rear of cooktop	5 3/4	146
N	Distance from base of chassis to base of elbow**	3/8	10

*Excluding grates

**When fitted.

PRODUCT WEIGHT	36" MODELS	
	LB	KG
Weight of product (excluding packaging)	90	41

CDV3 365 model illustrated

Dimensions may vary by ± 2 mm

CABINETRY DIMENSIONS

30" CUTOUT

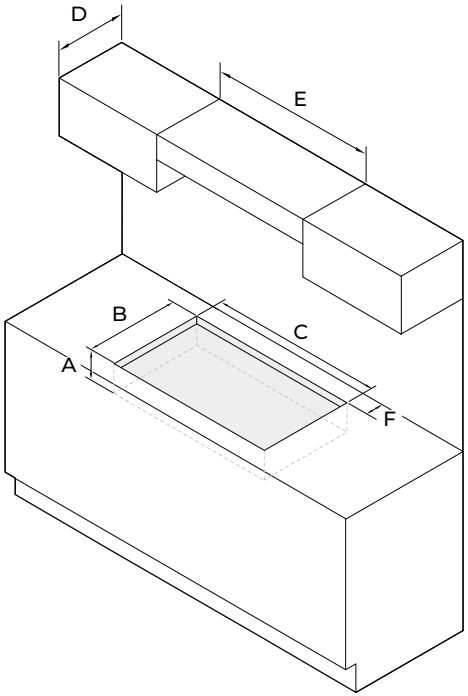

CABINETRY DIMENSIONS		30" MODELS	
		IN	MM
A	Min. height allowance*	4 7/16	112
B	Depth	19 3/4	502
C	Width	28 5/8	727
D	Max. depth of overhead cabinetry	13	330
E	Min. width of ventilation hood required	30	762
F	Min. distance from rear edge of cutout to nearest combustible surface	2	51

top of counter*

36" CUTOUT

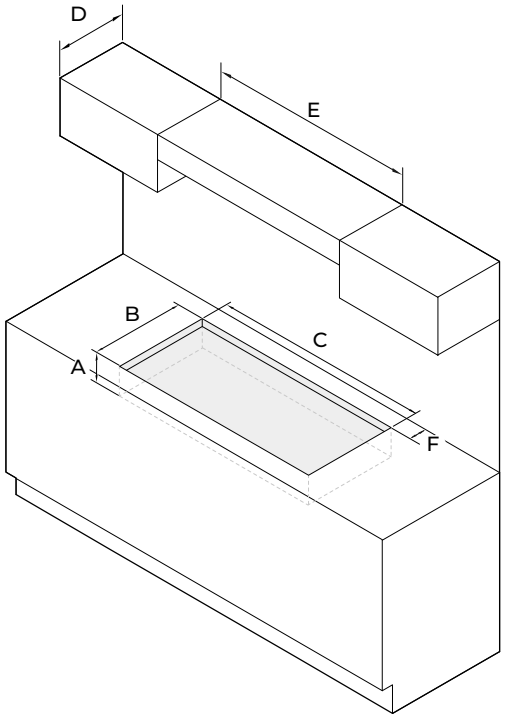

CABINETRY DIMENSIONS		36" MODELS	
		IN	MM
A	Min. height allowance*	4 7/16	112
B	Depth	19 3/4	502
C	Width	34 3/4	883
D	Max. depth of overhead cabinetry	13	330
E	Min. width of ventilation hood required	36	914
F	Min. distance from rear edge of cutout to nearest combustible surface	2	51

CLEARANCES

The below clearances apply to both wall and island installations for all models.

Ensure the cook surface sits flush or above the adjacent countertop and any openings behind or under the cooktop are sealed. Flow of combustion and ventilation air must not be obstructed.

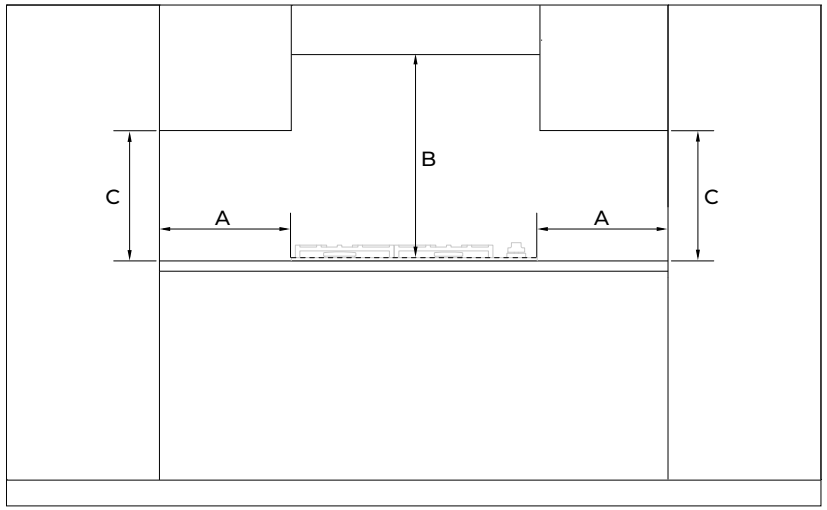

CLEARANCE DIMENSIONS	ALL MODELS	
	IN	MM
A Min. distance from side of cooktop to nearest:		
• vertical combustible surface	12	305
B Min. distance from cook surface to overhead:		
• combustible surface	36	914
• non-combustible surface	30	762
C Min. distance between countertop and cabinet	18	457

Non-combustible surfaces: as defined in 'National Fuel Gas Code' (ANSI Z223.1, Current Edition). Clearances from non-combustible materials are not part of the ANSI Z21.1 scope and are not certified by UL. Clearances of less than 6" (152mm) must be approved by the local codes and/or by the local authority having jurisdiction.

COOKTOP OVER OVEN

- Ensure the regulator position is clear of installation combination. Refer to 'Gas Connection Considerations for regulator dimensions.
- OB30SPPTX1 models require a sealed cavity. When installing under a CDV3 cooktop, the cooktop will act as a part of the overall oven cavity.

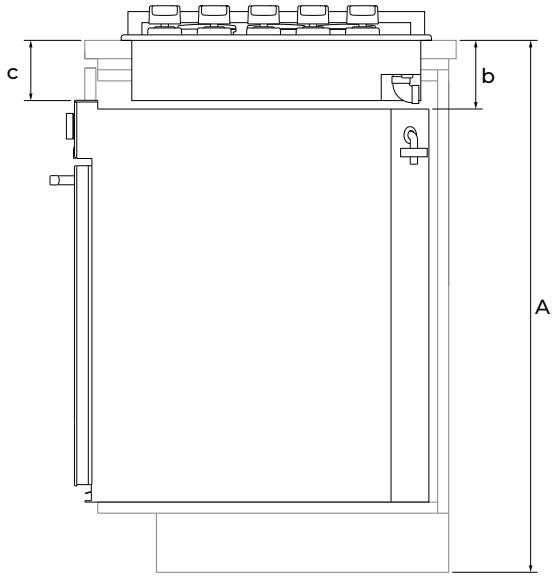

CLEARANCE DIMENSIONS	ALL MODELS	
	IN	MM
A Min. clearance under countertop	4 7/16	112
B Height of counter	36	914
C Min. height from countertop to oven front	4 1/16	103

OB30SPPTX1 illustrated. For all other install combinations refer to the technical information provided for chosen oven.

VENTILATION REQUIREMENTS

- Ventilation hoods and blowers are designed for use with single wall ducting, however some local building codes or inspectors may require double wall ducting and/or a damper. Consult local building codes and/or agencies, before installing to ensure local requirements are met. Semi-rigid ducting is recommended for maximum effectiveness.
- Hood blower speeds should be variable to reduce noise and loss of household air.
- Due to a high volume of ventilation air, a source of make-up air (outside replacement air) is recommended. This is particularly important for tightly sealed and insulated homes. A reputable heating and ventilating contractor should be consulted.

WALL INSTALLATION

Non-combustible

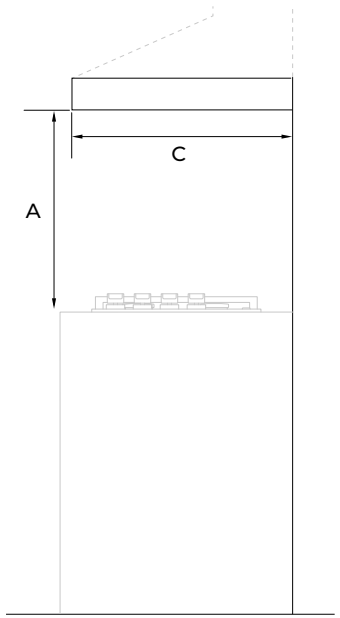

Combustible

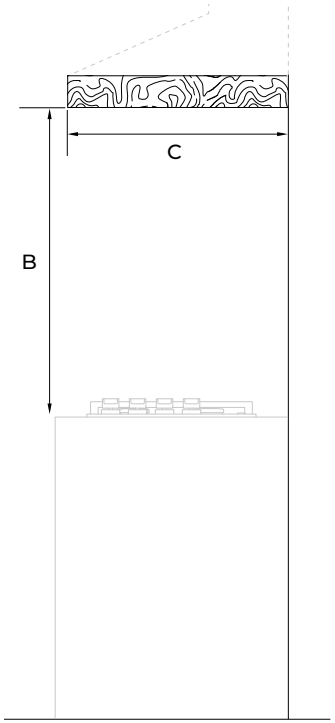

VENTILATION UNIT		WALL INSTALLATION RECOMMENDATIONS		
Hood		A	min. 30" (762mm)	max. 42 (762mm)
		B	min. 36" (914mm)	max. 42 (762mm)
		C	min. 19" (480mm)	
Blower	30" Cooktop	min. 550 CFM		
	36" Cooktop	min. 550 CFM		

ISLAND INSTALLATION

Non-combustible

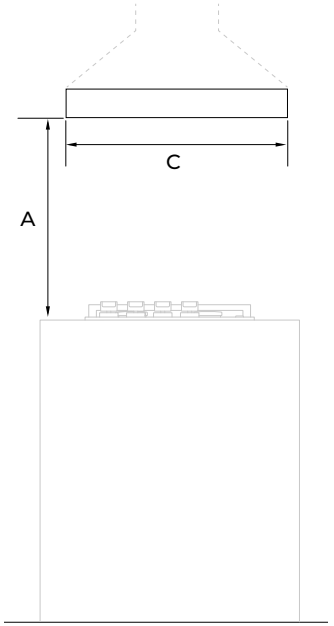

Combustible

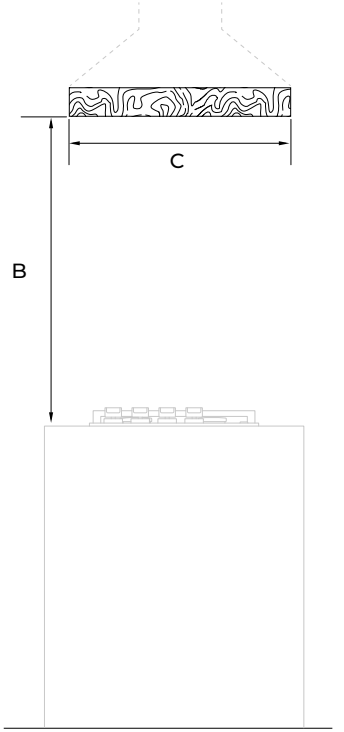

VENTILATION UNIT		ISLAND INSTALLATION RECOMMENDATIONS		
Hood		A	min. 30" (762mm)	max. 42 (762mm)
		B	min. 36" (914mm)	max. 42 (762mm)
		C	min. 19" (480mm)	
Blower	30" Cooktop	min. 550 CFM		
	36" Cooktop	min. 550 CFM		

GAS CONNECTION CONSIDERATIONS

The following are the available options for connecting the gas line to the cooktop to suit your installation:

GAS LINE TO GAS INLET

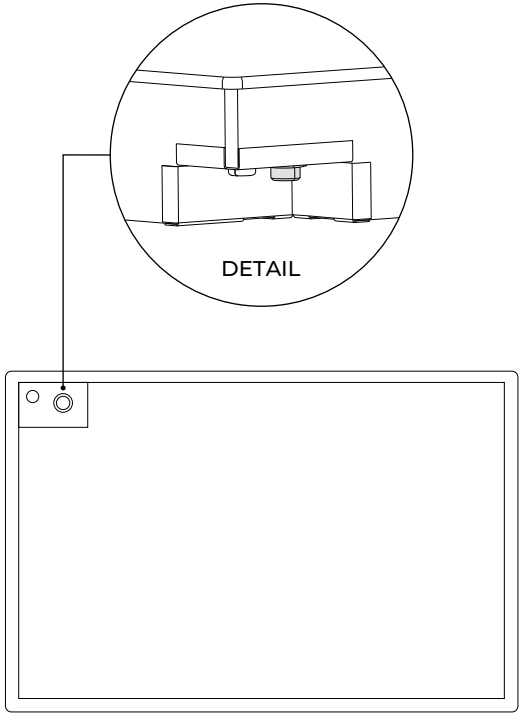

GAS LINE TO ELBOW FACING BACK

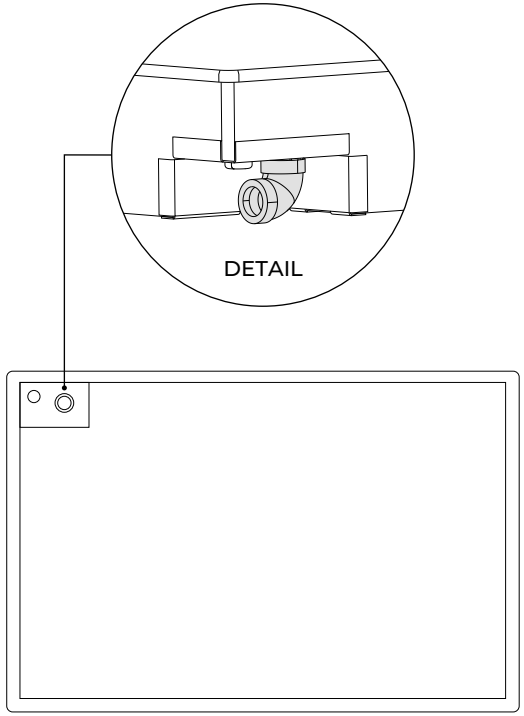

GAS LINE TO ELBOW FACING SIDE

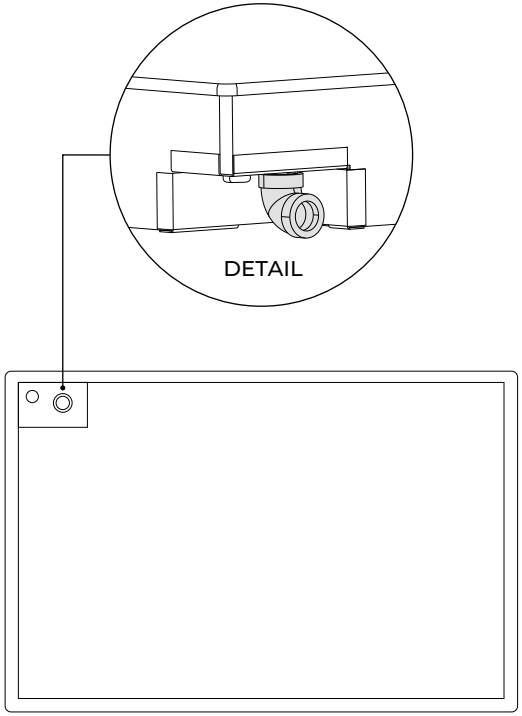

GAS REGULATOR DIMENSIONS

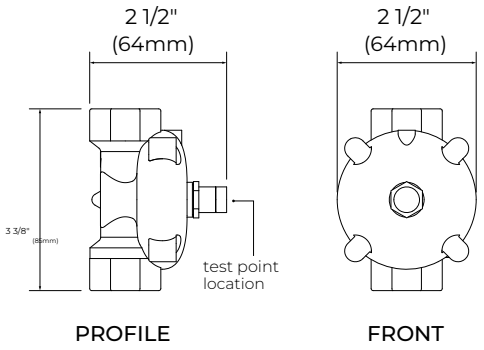

Ensure the supplied gas regulator dimensions are considered prior to the installation. This can be fitted at any point along the gas line.

GAS ELBOW DIMENSIONS

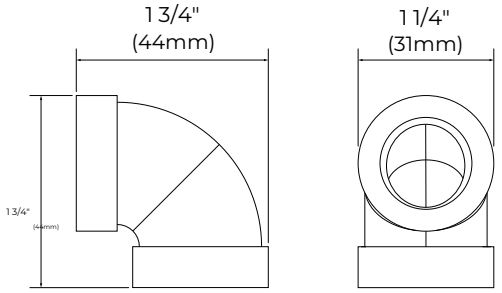

Ensure the supplied elbow dimensions are considered prior to the installation. This can be fitted at any point along the gas line.

INSTALLATION

1

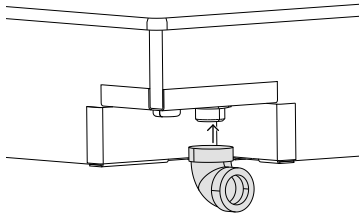

If turning the product over to fit the elbow, place the product on a protected surface and take care to ensure ignitors don't get damaged.

2

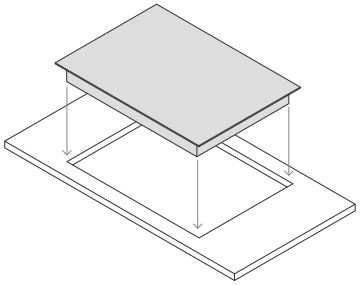

Gently lower the cooktop into the cutout ensuring you have access below the countertop to fit and secure the brackets.

3

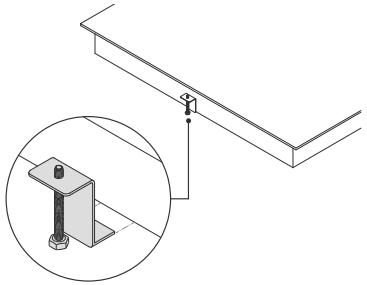

Fix the four supplied brackets to the base of the cooktop.

4

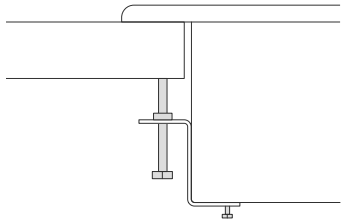

Tighten all screws to secure the cooktop to the countertop.

Ensure cooktop is level.

ELECTRICAL REQUIREMENTS

The electrical supply must be a correctly polarized, grounded 120 V AC, 60 Hz, single phase circuit suitable for the maximum current draw of the model, as detailed in the table below. Please verify your model's current draw by checking the rating label on the cooktop.

Required grounding method

This appliance is factory equipped with a power supply cord with a three-prong grounding plug (with polarized parallel blades). It must be plugged into a mating grounding type receptacle, connected to a correctly polarized 120 Volt circuit. If the circuit does not have a grounding type receptacle, it is the responsibility and obligation of the installer to have the existing receptacle changed to a properly grounded and polarized receptacle in accordance with all applicable local codes and ordinances by a qualified electrician. In the absence of local codes and ordinances, the receptacle replacement shall be in accordance with the National Electrical Code.

The third prong should not, under ANY circumstances, be cut or removed.

MODEL	VOLTAGE	MAX. CURRENT	FREQUENCY
CDV3 36" models	120 V	0.10 A	60 Hz
CDV3 30" models	120 V	0.10 A	60 Hz

- This cooktop must be grounded.
- Always disconnect electric supply cord from the wall outlet or service disconnect before servicing this appliance.
- Observe all governing codes and ordinances when grounding, in absence of which, observe National Electrical Code ANSI / NFPA No. 70.

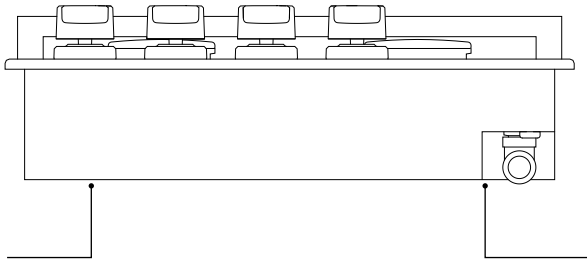

The rating label is located on the base of the cooktop towards the front right.

A wiring diagram label is attached to the bottom of the cooktop.

GAS CONNECTION

Verify the type of gas supplied to the location. The cooktop is shipped from the factory set up and adjusted for Natural Gas or LP, depending on the specific model ordered. If the cooktop is not set for the gas supplied at the site, return to the dealer.

Pressure testing at test pressures in excess of 1/2 psig (3.5 kPa.): the cooktop and its individual shut-off valve must be disconnected from the gas supply piping system

Pressure testing at test pressures equal to or less than 1/2 psig (3.5 kPa.): The cooktop must be isolated from the building's gas supply piping system by closing its individual manual shut-off valve

LP GAS CONNECTION

Connection: 1/2" NPT Minimum 5/8" dia. flex line. **Supply Pressure:** 11" to 14" W.C.

A regulator is required at the LP source to provide a maximum pressure of 14" W.C. to the cooktop regulator.

A manual shut-off valve (not supplied) must be installed in an accessible location in the gas line external to the appliance for the purpose of turning on or shutting off gas to the appliance. In Massachusetts, such shut-off valves should be approved by the Board of State Examiners of Plumbers & Gas Fitters. The shut-off valve must be located within 6 feet (1.8 meters) of the appliance.

Ensure the gas supply is turned off at the wall valve before connecting the appliance. The gas supply connections should be made by a qualified technician and in accordance with local codes or ordinances. In the absence of a local code, the installation must conform to the latest edition of National Fuel Gas Code ANSI Z223.1. When within the Commonwealth of Massachusetts, this appliance must be installed by a licensed plumber or gas fitter.

To prepare the unit for connection to the gas supply

Any combination of elbows and couplings can be used to connect the product to the regulator and gas supply as required by the installer.

NATURAL GAS CONNECTION

Connection: 1/2" NPT Minimum 5/8" dia. flex line. **Supply pressure:** 6" to 9" W.C

Fisher & Paykel recommends installing the manual shutoff valve in a location readily accessible by the customer, so that gas to the appliance can be shut off in an emergency situation. However, the appliance must not be modified in any way to accommodate such placement.

Pipe sealant must be used on all pipe threads.

The gas supply line must not protrude beyond the back of the appliance.

Ensure the gas supply is turned off at the wall valve before connecting the appliance. Leak-testing of the appliance shall be conducted according to the manufacturer's instructions. See instructions following. When checking the manifold gas pressure, the inlet pressure to the regulator should be at least 7.0" W.C. for natural gas or 12.0" for LP.

The flex line for the gas supply must be metal and be approved for appliance use by a certifying agency (CSA, CGA, or UL). Never use a hose made of rubber or other synthetic material, as the heat may cause the hose to melt and develop leaks.

The arrow on the regulator indicating direction of gas flow should be pointing towards the unit.

SAMPLE GAS CONNECTION

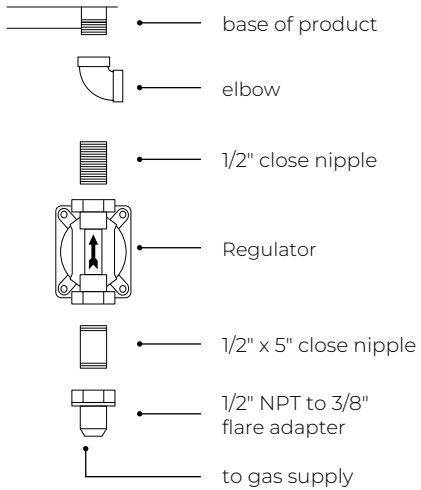

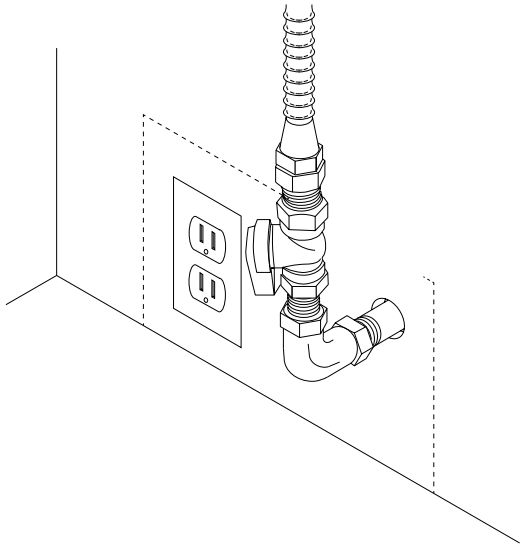

COOKTOP BURNERS

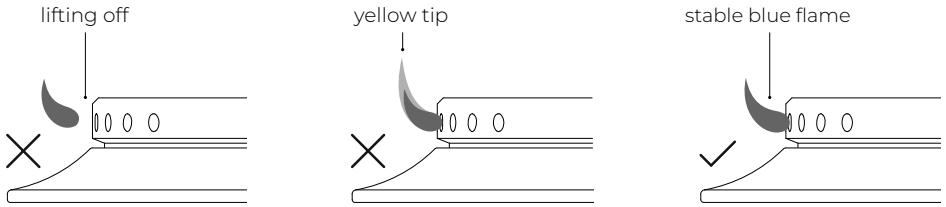

- To check that the ignition system operates correctly, light each burner by itself, then all burners in combination.
- Check for a well-defined blue flame without any yellow tipping.
- If any abnormality is evident, check that the components of the burner assembly are located properly.
- No air shutter adjustment is possible on the cooktop. Correct operation is achieved with factory installed settings for the correct gas type.
- When installing the burner port ring, align the two locating pins in the bottom side of the port ring with the locating notch and center holes on the top side of the simmer ring, and make sure these are properly engaged.
- Incorrect installation may produce a potentially dangerous flame and result in poor burner performance.
- If proper operation cannot be obtained, contact Customer Care or your nearest Fisher & Paykel Authorized Service Center.
- The rangetop must not be used until proper operation has been achieved.

LEAK TESTING

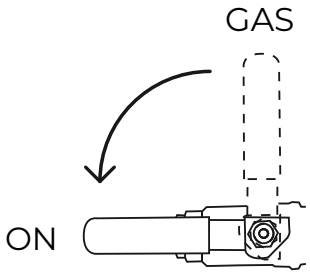

- Ensure all dials are set to OFF before connecting cooktop to gas supply.
- After final gas connection is made, turn gas supply on and test all connections in gas supply piping for gas leaks with a soapy water solution.
- In order to avoid property damage or serious personal injury, never use a match or open flame. If a leak is present, tighten joint or unscrew, apply more joint compound, tighten again and retest connection for leak.

FINAL CHECKLIST

TO BE COMPLETED BY THE INSTALLER

GENERAL

- ☐ Specified clearance maintained.
- ☐ Unit is level – front to back and side to side.
- ☐ All packaging materials have been removed.
- ☐ Dials turn correctly and freely.
- ☐ Burners light satisfactorily, both individually and with other burners operating.
- ☐ Flame adjustments made if required.

GAS

- ☐ Connection: 1/2 NPT with a minimum 5/8" diameter flex line. Site gas supply is compatible with cooktop model, and sufficient pressure is available
- ☐ The pressure regulator which is connected to the manifold is set correctly
- ☐ Manual gas shut-off valve installed in an accessible location.
- ☐ Unit tested and free of gas leaks.

ELECTRICAL

- ☐ Receptacle with correctly rated over-current protection is provided for service cord connection.
- ☐ Adequate ground connection.

Complete and keep for safe reference:

Model _____

Serial no. _____

Purchase date _____

Purchaser _____

Dealer address _____

Installer's name _____

Installer's signature _____

Installation company _____

Installation date _____

FISHERPAYKEL.COM

© Fisher & Paykel Appliances 2021. All rights reserved.

The models shown in this guide may not be available in all markets and are subject to change at any time.

The product specifications in this guide apply to the specific products and models described at the date of issue. Under our policy of continuous product improvement, these specifications may change at any time.

For current details about model and specification availability in your country, please go to our website or contact your local Fisher & Paykel dealer.