FRIGIDAIRE



30" Electric Range with Air Fry

Electric Range

Available Products: FCRE3083AD, FCRE3083AS

Available Colors: Black Stainless Steel, Stainless Steel

Version: 10/26

Product Specifications

Cooking Controls

Air Fry	Yes
Bake	Yes
Broil	Yes
Child Lock	Yes
Clock	Yes
Convection Bake	Yes
Delay Clean	Yes
Delay Start	Yes
Keep Warm	Yes
Kitchen Timer	Yes
Light	Yes
Lockout	Yes
Off	Yes
Oven Light	Yes
Preheat	Yes
Self Clean	Yes
Set Clock	Yes
Start	Yes
Temperature Display	Yes
Timer On / Off	Yes
Up / Down Arrow	Yes
User Preferences	Yes
Warm Zone	Yes

Oven

Bake Element	2500 Watts
Bake Element Pass	8
Bake Element Type	Hidden
Broil Element	3500 Watts
Broil Element Pass	6
Broil System	Yes
Cleaning System	Yes
Convection	Yes
Convection Type	Fan
Number of Convection Fans	1
Number of Rack Positions	6
Oven Interior Color	Midnight Black
Oven Light Quantity	1
Oven Light Watts	40 Watts
Rack Position Type	Embossed
Rack Type 1	Flat
Rack Type 1 Quantity	2

Cooking Controls Function

Change between Continuous Bake Setting or 12-Hour Energy Saving Feature	Yes
Delayed Bake	Yes
Program Fahrenheit or Celsius	Yes

Cooktop

Cooking Surface Type	Smooth
Element On Indicator Light	Yes
Hot-Surface Indicator Light	Yes

Drawer

Drawer Handle Style	Integrated
Drawer Type	Storage

Display

Control Location	Rear
Display Interface Color	White
Display Type	LED

Electrical Specifications

Amps @ 240 Volts	13 Amps
Connected Load @ 208V	10 kW
Connected Load @ 240V	13 kW
Minimum Circuit Required	40 Amps
Voltage Rating	240 V

General Specifications

Prop 65 Label	Yes
Warranty - Labor	1 Year
Warranty - Parts	1 Year
AB-1200	Information available at frigidaire.com/en/ab1200

For planning purposes only. We reserve the right to change specifications or discontinue models without notice.
Refer to Product Installation Guide for detailed installation instructions on the web at frigidaire.com / frigidaire.ca
Electrolux Major Appliances, N.A.
USA • 10200 David Taylor Drive •Charlotte, NC 28262 • Charlotte, NC 28262 • 1-877-4electrolux (1-877-435-3287) • frigidaire.com
CANADA • 5855 Terry Fox Way • Mississauga, ON L5V 3E4 • 1-800-265-8352 • frigidaire.ca

30" Electric Range with Air Fry	5486
Available Products: FCRE3083AD, FCRE3083AS	Available Colors: Black Stainless Steel, Stainless Steel
Version: 10/26	

Cooktop Performance

Right Front Element Burner Size	9"
Right Rear Element Burner Size	6"
Left Front Element Burner Size (Small)	6"
Left Front Element Burner Size (Large)	9"
Left Rear Element Burner Size	6"
Right Front Element Burner	3200 Watts
Right Rear Element Burner	1200 Watts
Left Front Element Burner (Small)	1400 Watts
Left Front Element Burner (Large)	3000 Watts
Left Rear Element Burner	1200 Watts
Center Rear Element Burner	100 Watts
Keep Warm Burner Location	Center Rear

Controls

Control Lock	Yes

Dimensions and Volume

Minimum Height	46 3/4"
Maximum Height	47 3/4"
Width	30"
Depth	26"
Depth With Door 90° Open	47 5/16"
Depth With Handle	28 1/2"
Oven Interior Height	18 1/8"
Oven Interior Width	25 3/16"
Oven Interior Depth	19 7/8"
Oven Capacity	5.3 Cu. Ft.

Installation

Adjustable Leveling Legs	Yes

Safety Certifications and Approvals

UL Listed	Yes

For planning purposes only. We reserve the right to change specifications or discontinue models without notice.
Refer to Product Installation Guide for detailed installation instructions on the web at frigidaire.com / frigidaire.ca
Electrolux Major Appliances, N.A.
USA • 10200 David Taylor Drive •Charlotte, NC 28262 • Charlotte, NC 28262 • 1-877-4electrolux (1-877-435-3287) • frigidaire.com
CANADA • 5855 Terry Fox Way • Mississauga, ON L5V 3E4 • 1-800-265-8352 • frigidaire.ca

30" Electric Range with Air Fry	5486
Available Products: FCRE3083AD, FCRE3083AS	Available Colors: Black Stainless Steel, Stainless Steel
Version: 10/26	

Installation Diagram

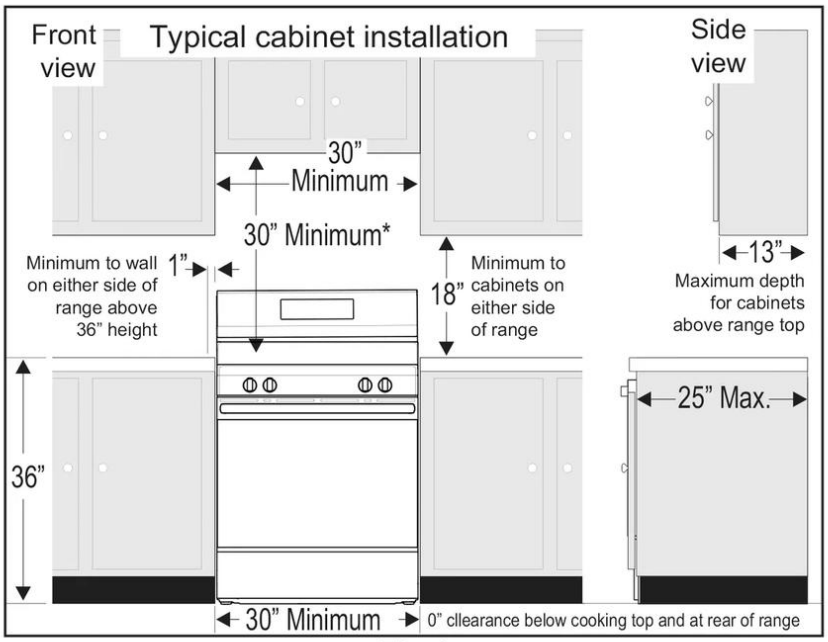

Fig. 1

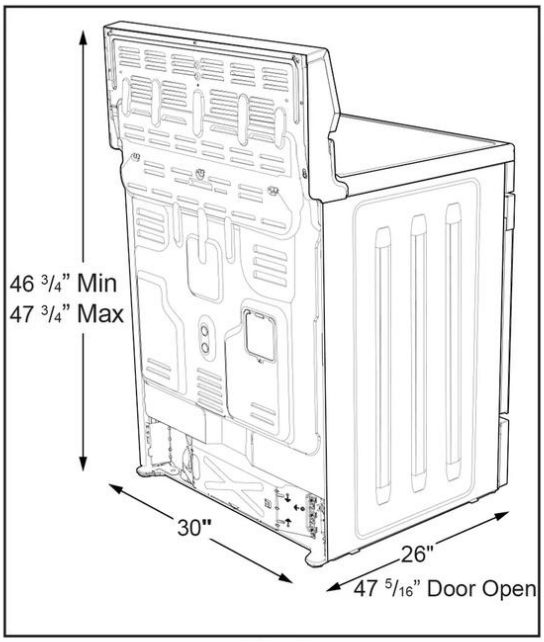

Fig. 2

*30" (762 mm) MINIMUM CLEARANCE BETWEEN THE TOP OF THE COOKING SURFACE AND THE BOTTOM OF AN UNPROTECTED WOOD OR METAL CABINET; OR 24" (610 mm) MINIMUM WHEN BOTTOM OF WOOD OR METAL CABINET IS PROTECTED BY NOT LESS THAN 1/4" (6 mm) FLAME RETARDANT MILLBOARD COVERED WITH NOT LESS THAN NO. 28 MSG SHEET STEEL, 0.015" (0.4 mm) STAINLESS STEEL, 0.024" (0.6 mm) ALUMINUM OR 0.020" (0.5 mm) COPPER. 0" (0 mm) CLEARANCE IS THE MINIMUM FOR THE REAR OF THE RANGE. FOLLOW ALL DIMENSION REQUIREMENTS PROVIDED ABOVE TO PREVENT PROPERTY DAMAGE, POTENTIAL FIRE HAZARD, AND INCORRECT COUNTERTOP AND CABINET CUTS.

TO ELIMINATE THE RISK OF BURNS OR FIRE BY REACHING OVER HEATED SURFACE UNITS, CABINET STORAGE SPACE LOCATED ABOVE THE SURFACE UNITS SHOULD BE AVOIDED. IF CABINET STORAGE IS TO BE PROVIDED, THE RISK CAN BE REDUCED BY INSTALLING A RANGE HOOD THAT PROJECTS HORIZONTALLY A MINIMUM OF 5" (127 mm) BEYOND THE BOTTOM OF THE CABINETS.

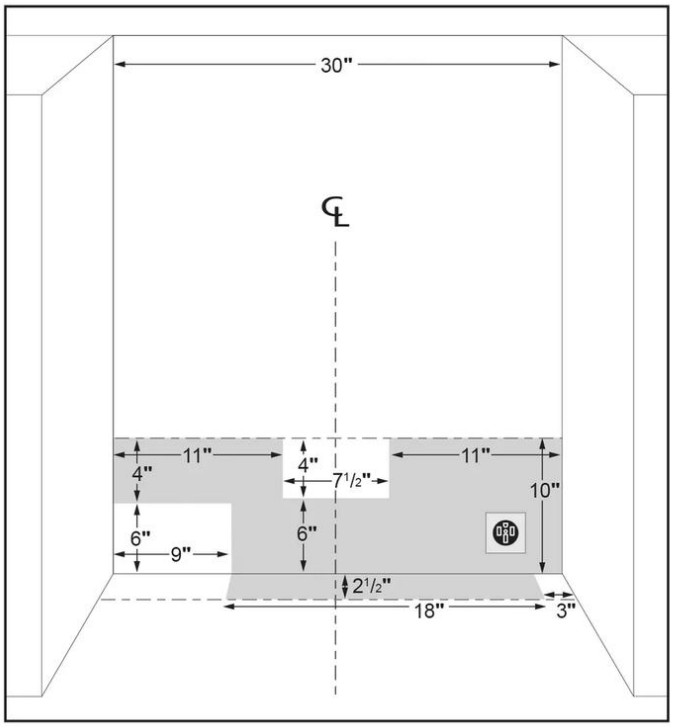

For planning purposes only. We reserve the right to change specifications or discontinue models without notice.
Refer to Product Installation Guide for detailed installation instructions on the web at frigidaire.com / frigidaire.ca
Electrolux Major Appliances, N.A.
USA • 10200 David Taylor Drive •Charlotte, NC 28262 • Charlotte, NC 28262 • 1-877-4electrolux (1-877-435-3287) • frigidaire.com
CANADA • 5855 Terry Fox Way • Mississauga, ON L5V 3E4 • 1-800-265-8352 • frigidaire.ca